⚠ **WARNING**

To help prevent serious or fatal injuries from entrapment or falls:

- Never allow a child under 6 years on upper bunk
- Use only a mattress that is __ inches long and __ inches wide on upper bunk
- Ensure thickness of mattress and foundation combined does not exceed __ inches and that mattress surface is at least 5 inches below upper edge of guardrails

DO NOT REMOVE THIS LABEL

§ 1513.6 Instructions

Instructions shall accompany each bunk bed set, and shall include the following information.

(a) *Size of mattress and foundation.* The length and width of the intended mattress and foundation shall be clearly stated, either numerically or in conventional terms such as twin size, twin extra-long, etc. In addition, the maximum thickness of the mattress and foundation required for compliance with § 1513.3 (a)(5) and (b)(1) of this part shall be stated.

(b) *Safety warnings.* The instructions shall provide the following safety warnings:

(1) Do not allow children under 6 years of age to use the upper bunk.

(2) Use guardrails on both sides of the upper bunk.

(3) Prohibit horseplay on or under beds.

(4) Prohibit more than one person on upper bunk.

(5) Use ladder for entering or leaving upper bunk.

(6) If the bunk bed will be placed next to a wall, the guardrail that runs the full length of the bed should be placed against the wall to prevent entrapment between the bed and the wall. (This applies only to bunk beds without two full-length guardrails.)

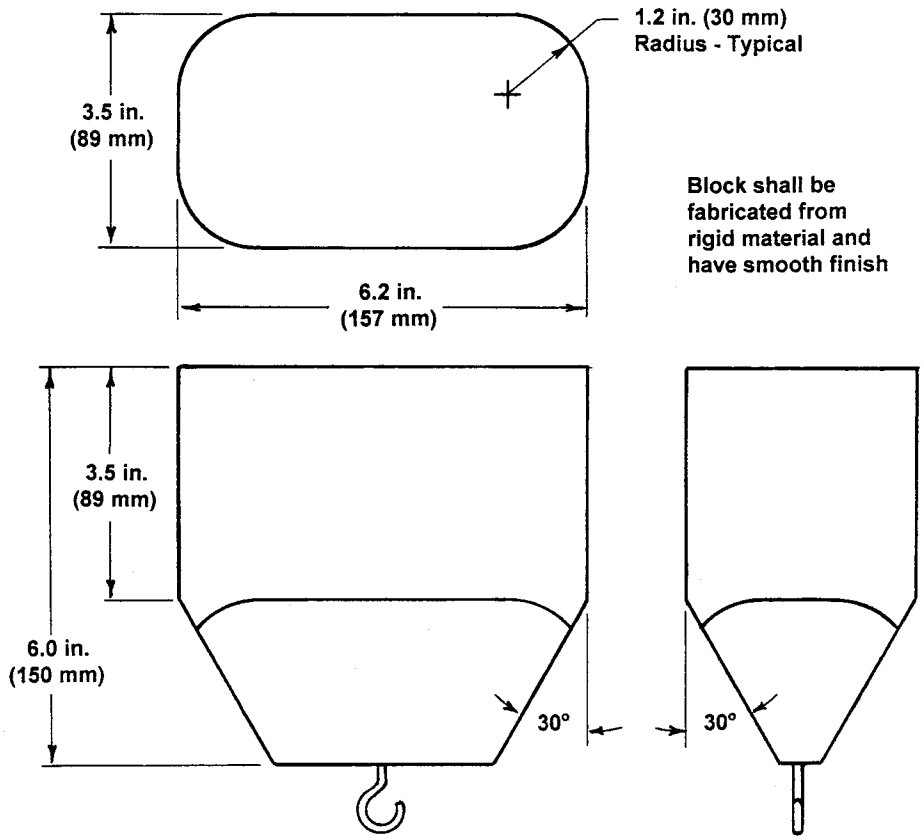

Figure 1 to Part 1513 - Wedge Block for Tests in § 1513.4(a), (b) and (c)

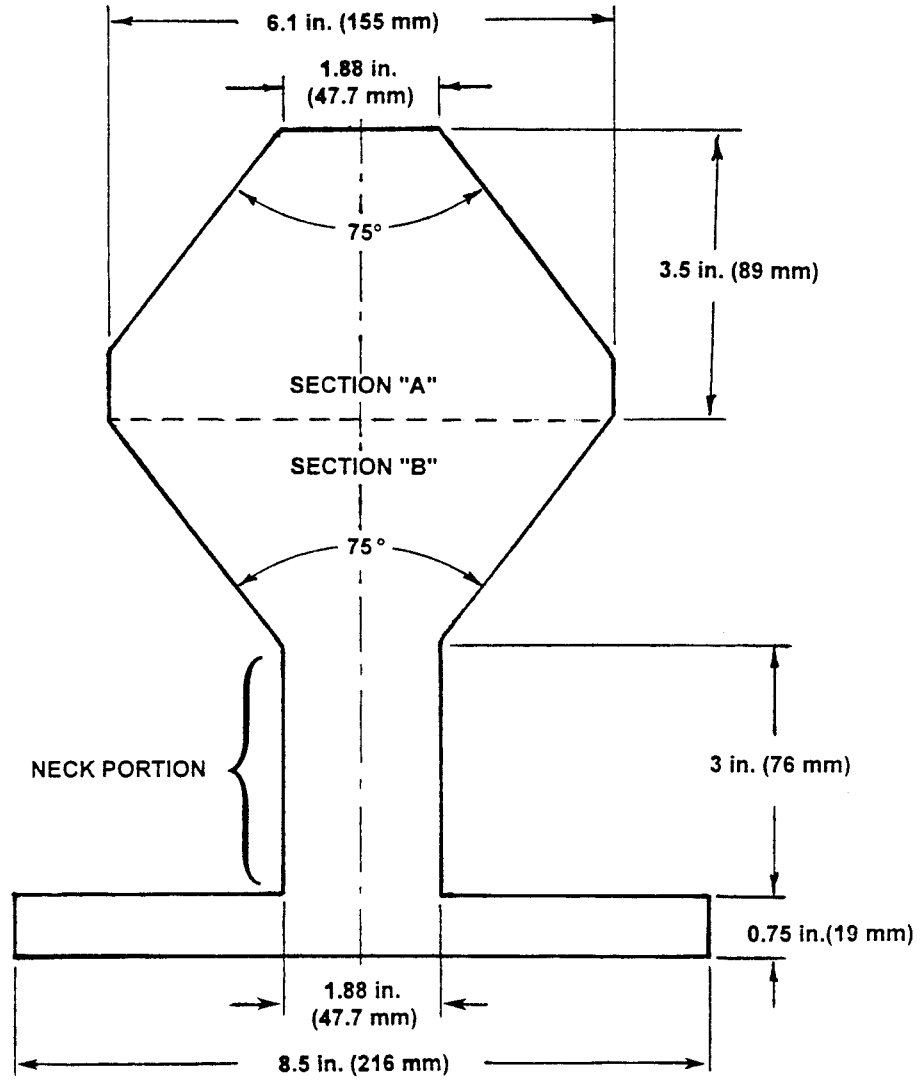

NOTE – Probe to be constructed from any rigid material 0.75 in. (19 mm) thick

Fig. 2 – Test Probe for Neck Entrapment

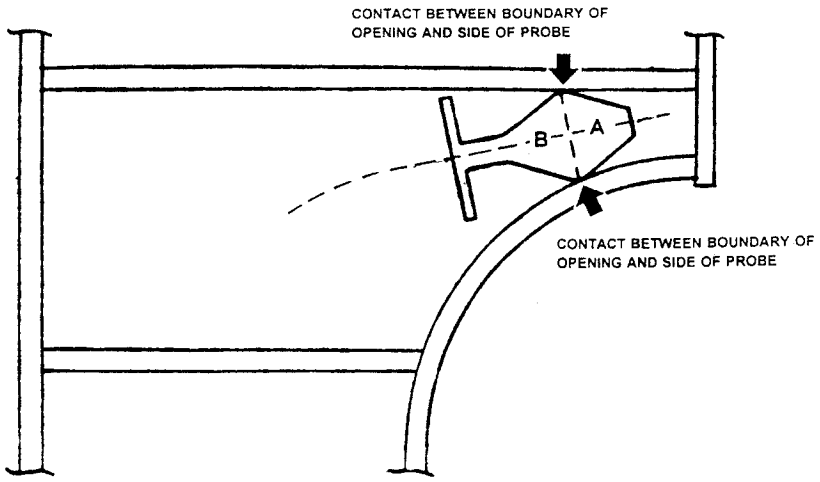

Fig. 3 – Motion of Test Probe Arrested by Simultaneous Contact With Both Sides of "A" Section of Probe and Boundaries of Opening

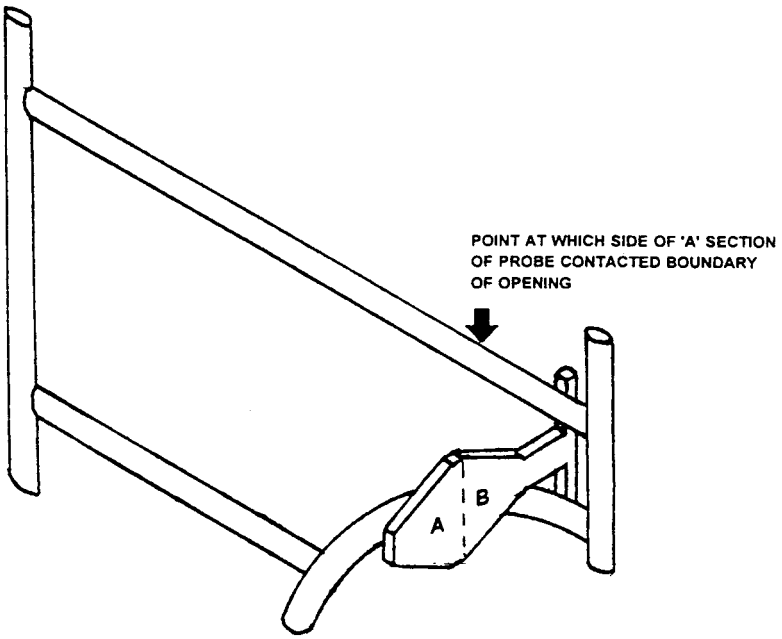

Fig 4 – Neck Portion of "B" Section of Probe Enters Completely into Opening

APPENDIX TO PART 1513—FINDINGS UNDER THE FEDERAL HAZARDOUS SUBSTANCES ACT

The Federal Hazardous Substances Act (FHSA) requires that the Commission, in order to issue part 1513, make the following findings and include them in the rule. 15 U.S.C. 1261(s), 1262(i). Because of this, the facts and determinations in these findings apply as of the date the rule was issued, December 22, 1999.

A. *Bunk beds present a mechanical hazard.* Section 2(s) of the FHSA states that an ''article may be determined to present a mechanical hazard if, in normal use or when subjected to reasonably foreseeable damage or abuse, its design or manufacture presents an unreasonable risk of personal injury or illness * * * (3 from * * * surfaces, edges, openings, or closures * * * , or (9) because of any other aspect of the articles design or manufacture.'' 15 U.S.C. 1261(s).

2. For a recent 9.6-year period, the CPSC received reports of 57 deaths of children under age 15 who died when they were trapped between the upper bunk of a bunk bed and the wall or when they were trapped in openings in the bed's structure. Over 96% of those who died in entrapment incidents were age 3 or younger. On average, averting these deaths is expected to produce a benefit to society with a present value of about $175 to $350 for each bed that otherwise would not have complied with one or more of the rule's requirements.

3. This increased safety will be achieved in three main ways. First, all bunk beds will be required to have a guardrail on both sides of the bed. If the bed is placed against a wall, the guardrail on that side is expected to prevent a child from being entrapped between the bed and the wall. The guardrail on the wall side of the bed must extend continuously from one end to the other. Second, the end structures of the bed must be constructed so that, if an opening in the end structure is large enough so a child can slip his or her body through it, it must be large enough that the child's head also can pass

through. Third, this area must also be constructed so that a child cannot insert his or her head into an opening and move to another part of the opening where the head cannot be pulled out and the neck can become entrapped.

4. For the reasons discussed in paragraph C of this Appendix, the benefits of the changes to bunk beds caused by this rule will have a reasonable relationship to the changes' costs. The rule addresses a risk of death, and applies primarily to a vulnerable population, children under age 3. The life-saving features required by the rule are cost-effective and can be implemented without adversely affecting the performance and availability of the product. The effective date provides enough time so that production of bunk beds that do not already comply with the standard can easily be changed so that the beds comply. Accordingly, the Commission finds that there is an unreasonable risk of entrapment injury associated with bunk beds that do not comply with part 1513.

B. *Where a voluntary standard has been adopted and implemented by the affected industry, that compliance with such voluntary standard is not likely to result in the elimination or adequate reduction of the risk of injury, or it is unlikely that there will be substantial compliance with such voluntary standard.*

1. *Adequacy of the voluntary standard.* In this instance, there is a voluntary standard addressing the risk of entrapment in bunk beds. However, the rule goes beyond the provisions of the voluntary standard. First, it eliminates the voluntary standard's option to have an opening of up to 15 inches at each end of the wall-side guardrail. Second, it requires more of the lower bunk end structures to have entrapment protection. The voluntary standard protects against entrapment only within the 9-inch space immediately above the upper surface of the lower bunk's mattress. The mandatory standard extends this area of protection upward to the level of the underside of the upper bunk foundation. Both of these provisions, which are in the rule but not in the voluntary standard, address fatalities and, as noted in this paragraph (a)(18), have benefits that bear a reasonable relationship to their costs.

Therefore, the Commission finds that compliance with the voluntary standard is not likely to result in the elimination or adequate reduction of the risk of entrapment injury or death.

2. *Substantial compliance.* i. The FHSA does not define ''substantial compliance.'' The March 3, 1999 Notice of Proposed Rulemaking summarized an interpretation of ''substantial compliance'' that the Office of General Counsel provided to the Commission. 64 FR 10245, 10248–49 (March 3, 1999). The Commission specifically invited public comment on that interpretation from ''all persons who would be affected by such an interpretation.'' Id. at 10249. The Commission received more than 20 comments on the interpretation.

ii. Having now considered all the evidence that the staff has presented, the comments from the public, and the legal advice from the Office of General Counsel, the Commission concludes that there is not ''substantial compliance'' with the ASTM voluntary standard for bunk beds within the meaning of the Consumer Product Safety Act and the Federal Hazardous Substances Act. See, e.g., 15 U.S.C. 2058(f)(3)(D)(ii); 15 U.S.C. 1262(i)(2)(A)(ii). However, the Commission does not adopt a general interpretation of ''substantial compliance'' focusing on whether the level of compliance with a voluntary standard could be improved under a mandatory standard. Rather, the grounds for the Commission's decision focus on the specific facts of this rulemaking and are stated below.

iii. The legislative history regarding the meaning of ''substantial compliance'' indicates that the Commission should consider whether compliance is sufficient to eliminate or adequately reduce the risk of injury in a timely fashion and that, generally, compliance should be measured in terms of the number of complying products, rather than the number of manufacturers who are in compliance. E.g., Senate Report No. 97–102, p. 14 (May 15, 1981); House Report No. 97–158, p. 11 (June 19, 1981); H. Conf. Rep. No. 97–208, 97th Cong., 1st Sess. 871, reprinted in 1981 U.S. Code Cong. & Admin. News 1010, 1233.

iv. Given this Congressional guidance, the Commission believes it appropriate to examine the number of conforming products as the starting point for analysis. However, the Commission does not believe that there is any single percentage of conforming products that can be used in all cases to define ''substantial compliance.'' Instead, the percentage must be viewed in the context of the hazard the product presents. Thus, the Commission must examine what constitutes substantial compliance with a voluntary standard in light of its obligation to safeguard the American consumer.

v. There are certain factors the agency considers before it initiates regulatory action, such as the severity of the potential injury, whether there is a vulnerable population at risk, and the risk of injury. See 16 CFR 1009.8. These and other factors also appropriately inform the Commission's decision regarding whether a certain level of conformance with a voluntary standard is substantial. In the light of these factors, industry's compliance rate with the voluntary standard for bunk beds is not substantial.

vi. In this case, the Commission deals with the most severe risk—death—to one of the most vulnerable segments of our population—infants and young children. While

the risk of death is not high, it exists whenever a young child is in a residence with a nonconforming bunk bed.

vii. Additionally, some products, such as hairdryers without shock protection devices, require some intervening action (dropping the hair dryer into water) to create the hazard. By contrast, deaths in bunk beds occur during the intended use of the product—a child rolling over in bed or climbing in or out of it—without any intervening action.

viii. The Commission must also consider that bunk beds have a very long product life, frequently being passed on to several families before being discarded. Thus, a number of children may be exposed to a bed during its useful life. Every noncomplying bed that poses an entrapment hazard presents the potential risk of death to any young child in the house. It is a risk that is hard for a parent to protect against, as children find their way onto these beds even if they are not put to sleep in them.

ix. Bunk beds are products that can be made relatively easily by very small companies, or even by a single individual. The Office of Compliance believes smaller entities will always present a compliance problem, because new manufacturers can enter the marketplace relatively easily and need little expertise to make a wooden bunk bed. The evidence seems to support the view that there will always be an irreducible number of new, smaller bunk bed manufacturers who will not follow the voluntary standard.

x. What constitutes substantial compliance is also a function of what point in time the issue is examined. In 1989, the Commission denied a petition for a mandatory bunk bed rule. At that time, industry was predicting that by April of 1989, 90% of all beds being manufactured would comply with the voluntary guidelines. But that was in the context of years of steadily increasing conformance and the hope that conformance would continue to grow and that deaths and near-misses would begin to decline. But the conformance level never grew beyond the projection for 1989 and deaths and near-misses have not dropped.

xi. Even with the existing compliance rate, the Commission is contemplating the prospect of perhaps 50,000 nonconforming beds a year (or more) entering the marketplace, with many beds remaining in use for perhaps 20 years or longer. Under these circumstances, a 10% rate of noncompliance is too high.

xii. It is now clear that the bunk bed voluntary standard has not achieved an adequate reduction of the unreasonable risk of death to infants and children in a timely fashion, and it is unlikely to do so. Accordingly, the Commission finds that substantial compliance with the voluntary standard for bunk beds is unlikely.

xiii. Products that present some or all of the following factors might not be held to as strict a substantial compliance analysis. Those which:

—Rarely or never cause death;
—Cause only less severe injuries;
—Do not cause deaths or injuries principally to a vulnerable segment of the population;
—Are not intended for children and which have no special attraction for children;
—Have a relatively short life span;
—Are made by a few stable manufacturers or which can only be made by specialized manufacturers needing a significant manufacturing investment to produce the product;
—Are covered by a voluntary standard which continues to capture an increasing amount of noncomplying products; or
—Require some additional intervening action to be hazardous.

xiv. And, in analyzing some other product, there could be other factors that would have to be taken into consideration in determining what level of compliance is adequate to protect the public. The tolerance for nonconformance levels has to bear some relationship to the magnitude and manageability of the hazard addressed.

xv. The Commission emphasizes that its decision is not based on the argument that a mandatory rule provides more powerful enforcement tools. If this were sufficient rationale, mandatory rules could always displace voluntary standards, and this clearly was not Congress's intent. But, with a mandatory standard, the necessity of complying with a mandatory federal regulation will be understandable to small manufacturers. State and local governments will have no doubt about their ability to help us in our efforts to locate these manufacturers.

C. *The benefits expected from the rule bear a reasonable relationship to its costs.*

1. *Bunk beds that do not comply with ASTM's requirements for guardrails.* The cost of providing a second guardrail for bunk beds that do not have one is expected to be from $15–40 per otherwise noncomplying bed. If, as expected, the standard prevents virtually all of the deaths it addresses, the present value of the benefits of this modification are estimated to be from $175–350 per otherwise noncomplying bed. Thus, the benefit of this provision is about 4–23 times its cost.

2. *Bunk beds that comply with ASTM's requirements for guardrails.* The voluntary standard allows up to a 15-inch gap in the coverage of the guardrail on the wall side of the upper bunk. Additional entrapment deaths are addressed by requiring that the wall-side guardrail be continuous from one end of the bed to the other. The estimated present value of the benefits of this requirement will be $2.40 to $3.50 per otherwise noncomplying bed. The Commission estimates

that the materials cost to extend one guardrail an additional 30 inches (760 mm) will be less than the present value of the benefits of making the change. Further, the costs of any design changes can be amortized over the number of bunk beds produced after the design change is made. Thus, any design costs are nominal.

3. *Lower bunk end structures.* The Commission is aware of a death, involving entrapment in the end structures of the lower bunk, occurring in a scenario not currently addressed by the voluntary standard. This death is addressed by extending the upper limit of the voluntary standard's lower bunk end structures entrapment provisions from 9 inches above the lower bunk's sleeping surface to the bottom of the upper bunk and by also including a test for neck entrapment in this area. The Commission expects the costs of this requirement to be design-related only, and small. Indeed, for some bunk beds, material costs may decrease since less material may be required to comply with these requirements than are currently being used. Again, the design costs for these modifications to the end structures can be amortized over the subsequent production run of the bed.

4. *Effect on market.* The small additional costs from any wall-side guardrail and end-structure modifications are not expected to affect the market for bunk beds, either alone or added to the costs of compliance to ASTM's provisions.

5. *Conclusion.* The Commission has no reason to conclude that any of the standard's requirements have costs that exceed the requirement's expected benefits. Further, the total effect of the rule is that the benefits of the rule will exceed its costs by about 4–23 times. Accordingly, the Commission concludes that the benefits expected from the rule will bear a reasonable relationship to its costs.

D. *The rule imposes the least burdensome requirement that prevents or adequately reduces the risk of injury for which the rule is being promulgated.* 1. The Commission considered relying on the voluntary standard, either alone or combined with a third-party certification program. However, the Commission concludes that a mandatory program will be more effective in reducing these deaths, each of which is caused by an unreasonable risk of entrapment. Accordingly, these alternatives would not prevent or adequately reduce the risk of injury for which the rule is being promulgated.

2. The Commission also considered a suggestion that bunk beds that conformed to the voluntary standard be so labeled. Consumers could then compare conforming and nonconforming beds at the point of purchase and make their purchase decisions with this safety information in mind. This, however, would not necessarily reduce injuries, because consumers likely would not know there is a voluntary standard and thus would not see any risk in purchasing a bed that was not labeled as conforming to the standard.